DigitalSpeck™ Lighting by Manning

Project Name: _____ Fixture Type: _____ Quantity: _____

SKYY sconce W-130

To specify, choose:

Model

☐ W-130

Housing Profile

☐ SE

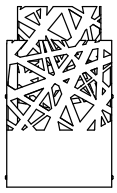

☐ SC

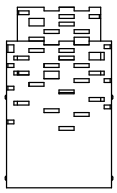

☐ SL

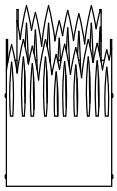

☐ SD

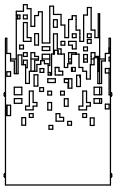

Dimensions

	W	H	E	MC
W-130	7"	12"	3"	7.75"

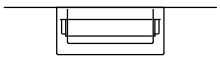

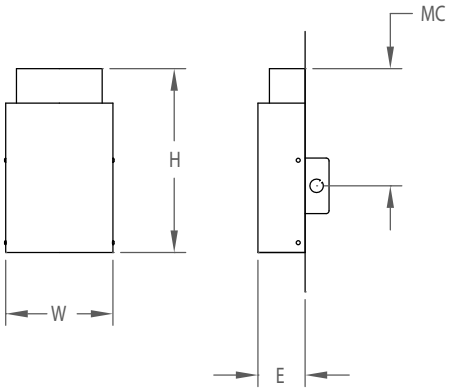

Illumination

1L11M35 = 1 integrated LED module, 11 total watts, 715 lumens, 3500K CCT, 85 CRI, L70 60,000 hours, 120-277 volt, 0-10v dimming

Finish

White powder coat paint

Related products:: SKYY pendant P-130

Specifications

Housing: Inner and outer fabricated .090 aluminum with powder coat painted steel mounting plate.

Mounting: Mounts to a standard octagonal junction box, mounting hardware provided by others.

LED: Line voltage Terralux LED engine with fully integrated driver, heat sink, and optics. Contains thermal management circuitry for optimum long-term lumen maintenance. Module designed for easy replacement when needed.

Rating: UL-Damp location listed.

Photometrics & BIM: Files available at www.digitalspeck.com.

Warranty: 5 years.

©2013 DigitalSpeck Lighting by Manning Lighting, Inc., Sheboygan WI USA 920-458-2184 www.digitalspeck.com