DigitalSpeck™ Lighting
by Manning

Project Name: _____ Fixture Type: _____ Quantity: _____

SKYY pendant P-130

To specify, choose:

Model

☐ P-130

Housing profile

☐ UE

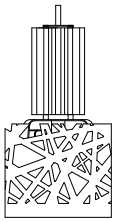

☐ UC

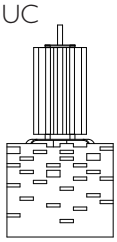

☐ UL

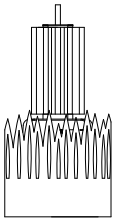

☐ UD

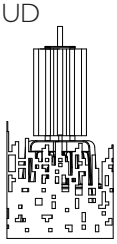

Dimensions

	D	H	H2	OAH
P-130	8"	7"	14.5"	96''

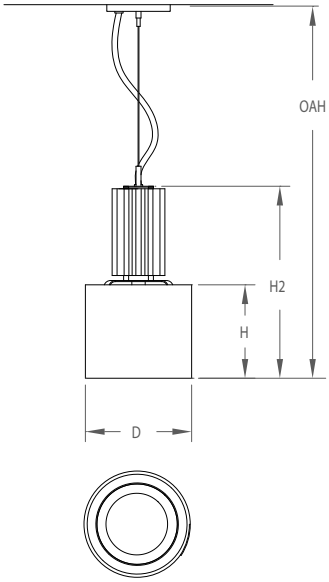

Illumination

☐ 1L40C40 or 1L40C30
Integrated LED array using
CREE XPG series LEDs, 40 watts, 2100 lumens, 4000K or 3000K CCT, 83 CRI, L70 50,000 hours, 120-277 volt, 0-10v dimming

Finish

Powder coat black, white, or silver finish on dimensional housing wrap and canopy. LED housing and heat sink with clear anodized silver finish.

☐ PP(BK) - Black
☐ PP(WH) - White
☐ PP(SR) - Silver

Specifications

Housing: Laser cut or punched aluminum wrap. Extruded and die cast aluminum heatsink components.

Mounting: Mounts to a standard octagonal junction box, mounting hardware provided by others.

LED: Cree XPG series LEDs in integrated array with heatsink and reflector.

Driver: Constant current driver located in heatsink above LED array.

Rating: UL-Dry location listed. c UL us

Warranty: 5 years.

Photometric & BIM: Files available at www.digitalspeck.com.

©2013 DigitalSpeck Lighting by Manning Lighting, Inc., Sheboygan WI USA 920-458-2184 www.digitalspeck.com